NOTE ON PIEZOELECTRIC GENERATORS WITH SMALL BACK ACTION

By
A. HUND
(Bureau of Standards)

A number of circuit arrangements suitable for automatic piezo control have been devised. Three such arrangements are shown in the Figures.

In Fig. 1, the piezoelectric element is connected between the grid and a copper cylinder which is free to move over

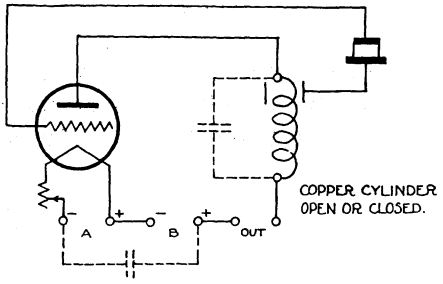

Figure 1

the coil in the plate circuit. The copper cylinder can be closed (forming a single turn) or open (axial cut.) The latter is more efficient since no appreciable power dissipation can take place in the cylinder, while the first method provides good tuning over a considerable frequency range. Experiments have shown this arrangement to be useful. The back action is very small since the piezoelectric element is coupled through distributed capacity to the plate branch.

In the arrangement of Fig. 2, two tubes are used. Tube 1 contains the ordinary piezo oscillator. Tube 2 delivers the

*Presented before the American Section, International Union of Scientific Radio Telegraphy, April 21, 1927.
Received by the Editor June 27, 1927.
Published by permission of the Director of the National Bureau of Standards of the U. S. Department of Commerce.

load. The same grid variations take place as on the grid of tube 1 but without loading it appreciably.

In Fig. 3, the same scheme is utilized with the exception

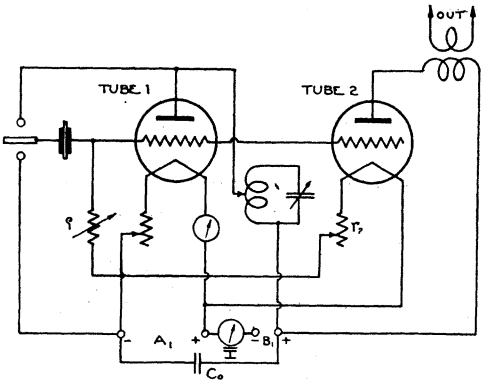

Figure 2

that a coupling condenser C is used between the two grids and a grid path r and a voltage in series are inserted. Additional plate voltage taken from B_2 can be used for in-

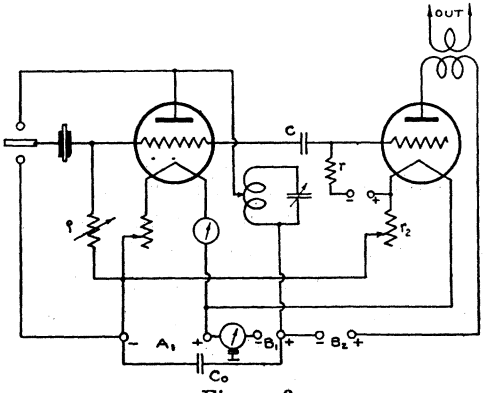

Figure 3

creasing the output. With this circuit the last tube can be adjusted to the proper point of the dynamic characteristic while the leak ρ of the first tube is used for producing proper amplitude of the current in that circuit.