COMPOSITE OSCILLATOR SYSTEMS FOR MEETING USER NEEDS FOR TIME AND FREQUENCY

S. R. Stein and F. L. Walls
Time & Frequency Division
National Bureau of Standards
325 Broadway
Boulder, CO 80303
(303) 499-1000, ext. 3224, 3207

ABSTRACT

Frequency standards are used in most navigation and telecommunications systems to provide a long term memory of either frequency, phase, or time epoch. From a systems point of view, the performance aspects of the frequency standard can be weighed against other systems characteristics, such as overall performance, cost, size, and accessibility; a number of examples are very briefly reviewed. The theory of phase lock and frequency lock systems is outlined in sufficient detail that one can easily predict total oscillator system performance from measurements on the individual components. As an example, details of the performance of a high spectral purity oscillator phase locked to a long term stable oscillator are given. Results for several systems, including the best system stability that can be obtained from present commercially available 5-MHz sources, are shown.

INTRODUCTION

Frequency standards are used in most navigation and communications systems to provide a long term memory of either frequency, phase, or time epoch. These quantities form a hierarchy, so that, in general, systems which depend on minimum time dispersion for their operation place more difficult requirements on the system oscillator than those which only require phase coherence or frequency stability. We will begin by very briefly examining some of the major applications of frequency standards and consider some of the possible tradeoffs between oscillator performance on the one hand, and the performance of other system components on the other.

Doppler Radar:

The simplest radars are CW Doppler devices which determine the radial velocity of a target by homodyne detection of the return signal with the

transmitted signal. In normal operation, the range and detectibility of targets using such devices is limited by the phase noise of the oscillator. Phase noise on the carrier* in the Doppler band of interest is reflected from nearby "clutter", having very large cross section, and cannot be distinguished from the Doppler shifted carrier reflected from a small distant target: Decreased phase noise therefore results in extended range and/or better contrast, without resorting to more complex signal analysis such as time delayed cross correlation. Very low phase noise can be obtained with a high drive level quartz crystal oscillator. Devices with white phase noise below 10^{-18} rad^2/Hz at a carrier frequency of 100 MHz are commercially available. However, such oscillators have much degraded long term performance compared to low drive level quartz oscillators or atomic frequency standards. Consequently, in order to satisfy spectral purity requirements and long term stability specifications it may be necessary to adopt a systems approach to the oscillator, e.g., a high drive level crystal oscillator locked to a low drive level crystal oscillator or an atomic clock.

Doppler Navigation:

Present day navigation systems both for satellites and for deep space tracking utilize two-way or coherent measurements. A signal is transmitted to the spacecraft where it is transponded for Doppler detection on Earth. The velocity error is proportional to the frequency change of the oscillator during the round trip to the spacecraft and establishes a requirement on the stability of the frequency standard.

Coherent Doppler tracking has the disadvantage that a significant amount--approximately one-third--of the time is spent tracking the spacecraft and this requires the largest, most accurate radio antennas available. The inclusion of an onboard frequency standard eliminates the need for the large antennas. By differencing two one-way Doppler signals, it would be possible to use smaller antennas for shorter periods, thus considerably decreasing the initial capital expenses. The stability requirements of the spacecraft beacon are quite modest; the range information is contained in the differential Doppler signal, causing the noise of the onboard oscillator to cancel to first order. However, to achieve tracking accuracies which are desired for the 1980's--less than 10 cm range error and less than .05 rad angular error--it will be necessary to synchronize independent clocks at the ground stations to better than 1 ns. Since the best existing commercial clocks cannot achieve 1 ns time dispersion for more than one day, either daily resynchronizations or new clock systems will be required.

*See Appendix A for definitions, specifications and general discussion of phase noise.

Geodesy:

The determination of baseline coordinates over geodynamically interesting distances is being done using remote very long baseline interferometry (VLBI) stations. Quasars are used to establish a sparse grid system which may then be filled in by satellite radiointerferometry. The role of frequency standards in VLBI is to establish phase references at each station which are coherent with each other for the duration of the measurement. The standards are used to independently determine the phase of the received signal, thus permitting subsequent cross correlation of the signals. The maximum duration of the data stream which may be cross correlated is small--approximately one-tenth--compared to the correlation time of either reference oscillator. The correlation time, τ_c, of an oscillator is defined so that the integrated phase noise for frequencies greater than $1/\tau_c$ is one rad^2, that is (Appendix A)

$$\langle\phi^2\rangle_{1/\tau_c,\ \infty} = 1$$

For an oscillator at frequency ν_o whose long term fractional frequency stability,** $\sigma_y(\tau)$, is dominated by a flicker noise level, σ_y(flicker), the coherence time is $1/(2\sigma_y(\text{flicker})\nu_o)$. For example, let $\sigma_y(\text{flicker}) = 10^{-14}$ and $\nu_o = 10^{10}$ Hz; the coherence time is 5000 s and the maximum duration of the data stream is 500 s. The primary tradeoff is time spent for resynchronization versus a more elaborate clock system.

When satellite signals are used for geodetic baseline measurements, there is a tradeoff between antenna and oscillator performance. If a suitable phased array antenna can be built which hops from one satellite to the next once each second, then frequency standards at the independent ground stations having stability of only 5×10^{-11} are required for sub-decimeter accuracy. However, if dishes must be used, the cycle rate between satellites would be approximately one hundred times slower and the oscillator would need to be one hundred times more stable.

Time Code Navigation:

The Global Positioning System will function by the transmission of time and position data from an ensemble of satellites. By observing four satellites, the observer can solve for his three position coordinates and the time. Since the solution depends on the range to a satellite being proportional to the time of flight of the signal, the errors in the coordinate solution are directly proportional to the time dispersion of the onboard clock. The satellite clocks must be regularly resynchro-

**See Appendix B for a precise definition and discussion of $\sigma_y(\tau)$.

nized before the range error due to time dispersion exceeds the system accuracy specification.

Fig. 1 shows the time dispersion of a clock, using optimum prediction

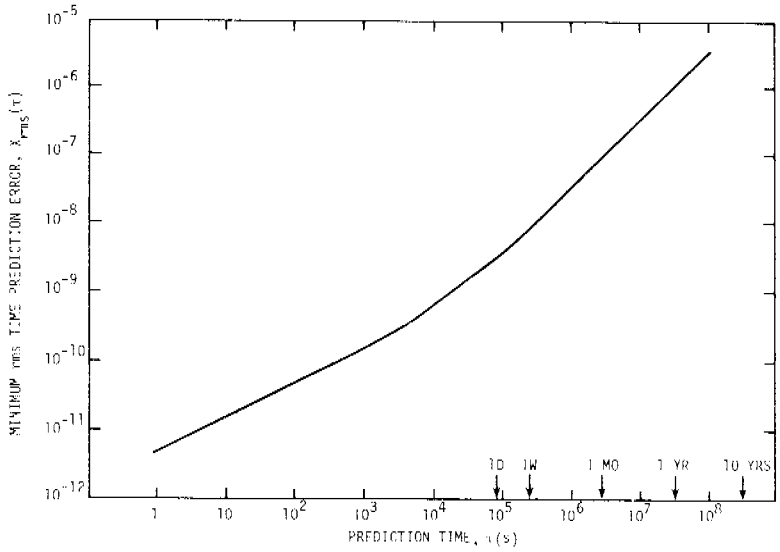

Fig. 1. Time dispersion of a clock with stability $\sigma_y^2(\tau)=(5\times10^{-12}\tau^{-1/2})^2 + (3\times10^{-14})^2$, using optimum prediction techniques.

techniques, due to white frequency noise and flicker frequency noise;[1] the assumed time domain stability is $\sigma_y^2(\tau) = (5 \times 10^{-12}\tau^{-1/2})^2 + (3 \times 10^{-14})^2$. The rms prediction error, $x_{rms}(\tau)$, is $\phi^2(\tau)^{1/2}/2\pi\nu_o$ where $\phi(\tau)$ is the difference between the oscillator's actual phase (time) and the predicted value after a time interval τ. For the assumed oscillator performance

$$x_{rms}(\tau) \cong (5 \times 10^{-12}\ \tau^{1/2})^2 + (\frac{3 \times 10^{-14}}{\ln 2}\ \tau)^2$$

and the value of the rms prediction error at one day is 4 ns, almost entirely due to the flicker frequency noise. After a sufficiently long time this model will no longer apply because deterministic effects will dominate over the random noise terms. The dominant deterministic term results from a lack of knowledge of the true frequency drift and causes time dispersion which is quadratic in the prediction interval, i.e., $x_{rms}(\tau) = (D/2)\tau^2$ where D is the frequency drift per unit time.

The inclusion of a frequency standard on board a satellite or space vehicle results in several favorable features. In the case of GPS, it permits an unlimited number of users to simultaneously, passively access the system and eliminates the need for the user to have a transmitter

and to track the satellite. However, to satisfy these requirements in a system which is capable of 3 m (10 ns) accuracy 10 days after the last satellite clock resynchronization requires a spaceworthy clock with performance which has only been demonstrated in the laboratory.

Communications Systems:

There is a close relationship between the performance of oscillators and the communications systems which utilize them. Phase coherent systems require carrier synchronization, that is, a precise knowledge of the transmitted carrier frequency and phase. In addition, symbol, word and frame synchronization are usually needed. In some situations, phase coherent techniques do not apply. This is necessarily the case, for example, when the transmitted power is limited and the range is very great. The finite width of the carrier prevents unlimited narrow banding of the receiver in order to compensate for loss of signal-to-noise ratio.

The stability of the transmitted signal has similar effects on both incoherent and coherent systems although the latter are more sensitive. Some typical examples are: (1) The time to acquire frequency or phase synchronization is proportional to the maximum frequency error of the transmitter divided by the receiver bandwidth. (2) The probability of bit errors increases as a result of noisy carrier reference or synchronization signals. (3) The transmitted carrier power decreases as a result of phase noise power. (4) The required channel bandwidth and deadbands must accomodate the long term instability of the transmitter.

Need for Composite Oscillator Systems:

One result of an overall system analysis will be the specifications for a frequency standard needed to provide reference signals. If the specifications cannot be met by a commercially available device, then it may still be possible to meet the requirements with a system composed of more than one device.

Oscillator systems are useful because the operating conditions which optimize one performance aspect of a simple oscillator are normally unfavorable to other aspects. For example, in a quartz crystal oscillator, high power dissipation in the resonator is necessary to achieve the best short term stability (averaging times less than .1 s) but, due to the piezoelectric nonlinearities, much lower power levels are required for the best long term stability and lowest drift.[2] However, a system can be constructed consisting of two devices, one optimized for long term stability and the other for short term stability. The system can have a single output which has the best performance of the two devices.[3] A systems approach is also useful for optimizing other aspects of oscillator performance. Systems can be used to provide power gain after frequency mulitiplication, to provide filtering functions which are not

possible with passive devices and to provide unusual combinations of properties such as high tuning rate combined with superior long term stability. Equations which permit one to predict the noise performance of a system comprised of previously measured components are developed and several examples are evaluated.

One system will be evaluated in detail, both theoretically and experimentally. It is an extremely important example because of its wide applicability and the fact that it can be easily constructed from commercially available components. It consists of a quartz crystal oscillator having state-of-the-art spectral purity which is phase locked to a second quartz crystal oscillator having state-of-the-art long term stability. Data are presented which demonstrate the overall system spectrum and time domain stability as a function of the loop parameters.

THEORY OF PHASE LOCK AND FREQUENCY LOCK SYSTEMS

The general problem is to improve the stability of a voltage controlled oscillator (VCO) by locking it to a reference which has better performance over some range of interest. Two types of feedback loops are normally used: a frequency lock loop is required when the reference is a passive resonator: a frequency lock loop (FLL) or a phase lock loop (PLL) may be used when the reference is an active device producing its own output signal.[3] It is shown below that the same equations can be used to determine the stability improvement, independent of the type of loop.

Fig. 2 shows the general features of the feedback loop. The reference frequency is Ω_r and deviations from the nominal are denoted $\Delta\Omega_r(t)$; the

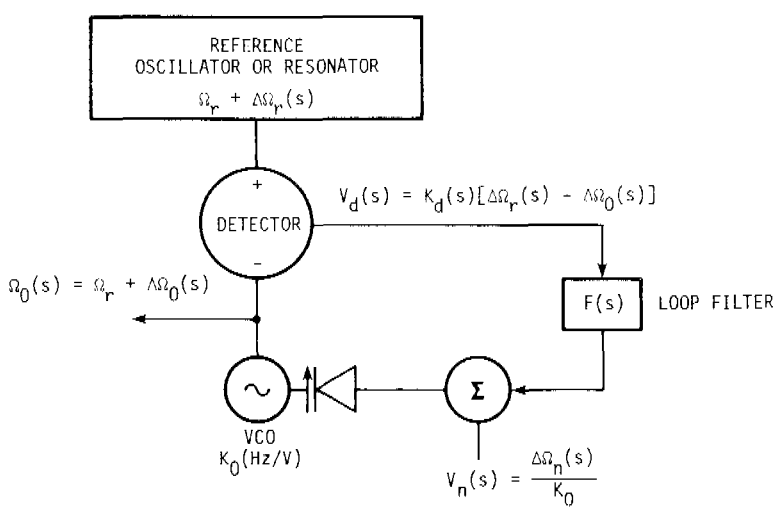

Fig. 2. Phase or frequency lock loop.

VCO has frequency Ω_r and deviations $\Delta\Omega_o(t)$. It is compared with the reference in the device labelled detector whose output is $V_d(s) = K_d(s)[\Delta\Omega_r(s) - \Delta\Omega_o(s)]$, where $\Delta\Omega_r(s)$ and $\Delta\Omega_o(s)$ are the Laplace transforms of the corresponding frequency deviations. The phase and frequency transforms are related very simply by the expression

$$\phi(s) = \Delta\Omega(s)/s$$

which makes it possible to distinguish between the FLL and the PLL entirely through the functional dependence of $K_d(s)$. For the FLL, $K_d(s)$ is a constant, K_v, while for the PLL, $K_d(s) = K_\phi/s$ where K_ϕ is a constant. Thus the detector output for the PLL is proportional to the phase difference between the VCO and the reference, $V_d(s)=K_\phi[\phi_r(s) - \phi_o/s]$. The noise voltage generator $V_n(s)$ represents the internal noise of the VCO. If the tuning rate of the oscillator is K_o(Hz/volt), then the open loop noise of the VCO is given by

$$\Delta\Omega_n(s) = k_o V_n(s)$$

The closed loop performance of the system follows by tracing $\Delta\Omega_o(s)$ around the loop:

$$\Delta\Omega_o(s) = \left[\frac{1}{1+G(s)}\right]\Delta\Omega_n(s) + \left[\frac{G(s)}{1+G(s)}\right]\Delta\Omega_r(s),$$

where $G(s) = K_oK_d(s)F(s)$ is the open loop gain. Assuming that the noise in the VCO and the reference are uncorrelated, the spectral density of the frequency noise obeys the equation

$$s_{y_o}(\omega) = \left[\frac{1}{|1+G(j\omega)|^2}\right] s_{y_n}(\omega) + \frac{|G(j\omega)|^2}{|1+G(j\omega)|^2} s_{y_r}(\omega)$$

where the y's denote the deviations normalized to the carrier frequency, e.g., $y_o = \Delta\Omega_o/\Omega_r$.[4] It follows that $S_\phi = S_y(\Omega_r^2/\omega^2)$, so S_ϕ satisfies the same relation as S_y:

$$s_{\phi_o}(\omega) = \left[\frac{1}{|1+G(j\omega)|^2}\right] s_{\phi_n}(\omega) + \frac{|G(j\omega)|^2}{|1+G(j\omega)|^2} s_{\phi_r}(\omega)$$

$|G(j\omega)|$ generally increases monotonically with decreasing ω, making it possible to draw some general conclusions about the output spectrum of the servoed oscillator. The noise in the reference oscillator and in the control loop is low pass filtered, while the noise in the VCO is high pass filtered. This leads to the most common situation--the output spectrum is dominated by the reference oscillator at low Fourier frequencies and by the VCO at high Fourier frequencies. However, in the event that the spectral purity of the VCO, $S_{\phi}n(\omega)$, is much worse than the purity of the servo or reference, we see that $S_{\phi_o}(\omega)$ is approximately $S_{\phi_n}(\omega)/|G(j\omega)|^2$. If $|G(j\omega)|$ has a maximum value of 10^4, for example, then the spectral density of the locked VCO can never be better than $S_{\phi_n}(\hat{\omega})/(10{,}000)^2$, even if the servo and reference are much less noisy at that Fourier frequency.

This indicates that $|G(j\omega)|$ should be as large as possible. However, the maximum value is fixed by the rolloff slope and the maximum unity gain frequency which can be tolerated by the short term stability of the reference signal. If the rolloff exceeds 12 dB/octave at the unity gain point, then the loop will oscillate. The required shape of $G(j\omega)$ to reduce the effect of the open loop VCO noise below the level of the reference noise for Fourier frequencies below the unity gain frequency can be determined from the above equation. For example, to transform random walk of phase ($S_{\phi} \propto \omega^{-2}$) to white phase noise ($S_{\phi} \propto \omega^0$) requires a single integration (i.e., $|G(j\omega)| \propto 1/\omega$). An analogous result can be derived for deterministic processes which can not be described in terms of spectral densities. For example, the unlocked VCO may exhibit frequency offset $\phi(t) \propto t$, frequency drift $\phi(t) \propto t^2$, or even frequency acceleration. If the parameter to be controlled has an open loop behavior proportional to t^P then the requirement for the closed loop system to have zero dc error is[4]

$$\lim_{\omega \to 0} [\omega^P |G(j\omega)|] = \infty.$$

A critically damped second order loop response is nearly ideal for oscillator system applications. The required open loop gain function is

$$G(j\omega) = \frac{\omega_n^2}{\omega^2} \left(1 + j2\frac{\omega}{\omega_n}\right)$$

in which ω_n is called the natural frequency of the loop.[6]

In the case of the PLL it can be approximated by selecting the filter of Fig. 3a for F(s), while the FLL requires an additional integration in order to have the same overall open loop gain function.

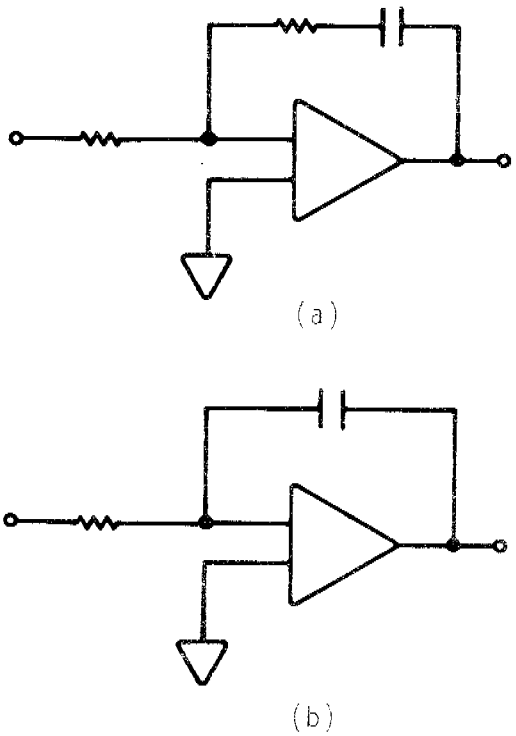

Fig. 3. Filters for phase and frequency lock loops. Filter (a) is used to achieve a second order PLL response while (a) and (b) in series produce a second order FLL response.

For frequencies small compared to $\omega_n/2$, the open loop gain increases at 12 dB/octave. However, because of the breakpoint at $\omega_n/2$, the slope is only 6 dB/octave at the unity gain frequency and the loop is unconditionally stable. Because of the limitations of analog integrators and other circuitry, the PLL, which has an inherent pure integration, is superior in performance where it is applicable. Errors in such a loop produce a phase offset between the two oscillators, whereas errors in a FLL result in a frequency offset. The FLL must be used with passive resonators and can be used to achieve improvments in some PLL characteristics, such as pull in range and acquisition time.

SYSTEMS APPROACH FOR SIMULTANEOUS SPECTRAL PURITY AND LONG TERM STABILITY

There are commercially available oscillators with superior spectral purity and long term stability, but no one device has the best performance for all averaging times. This section will show how to design a

system which has the optimum performance everywhere: Data are presented which confirm the results of the previous section.

The low drift 5-MHz oscillator, used as the reference, is characterized by the measured spectral density,

$$s_{\phi_r}(f) = \frac{10^{-11.3}}{f^3} + 10^{-13.6}$$

while the spectrally pure, 5-MHz oscillator is approximately characterized by

$$s_{\phi_n}(f) = \frac{10^{-10.5}}{f^3} + 10^{-17.1},$$

where $f=\omega/2\pi$ is the Fourier frequency offset from the carrier.

A second order PLL was selected to combine these two devices as a system; Fig. 4 shows the major elements of the circuit. A double balanced mixer serves as the phase detector. It is followed by a 2-pole filter which attenuates the 10 MHz output of the mixer, but has little influence on the loop. The capacitor shunting the operational amplifier and the low pass filter following it limit the noise bandwidth of the loop at a sufficiently high frequency compared to the natural frequency of

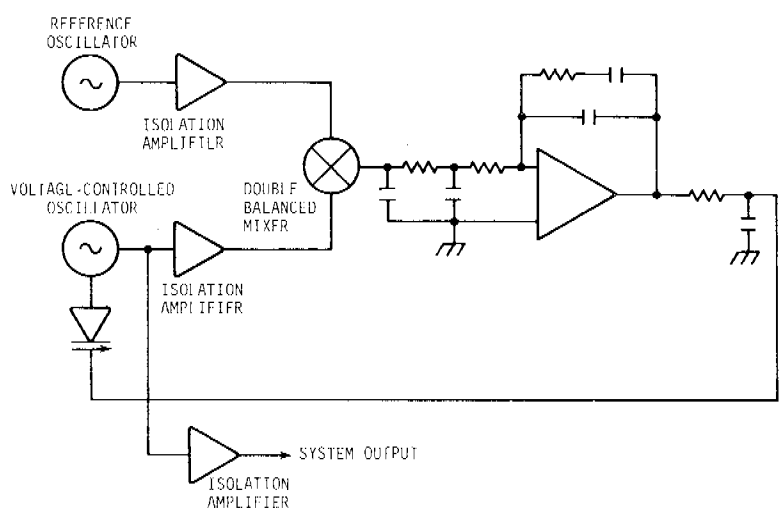

Fig. 4. Second order phase lock loop.

the loop so that they have negligible effect on the loop response. The resistor and capacitor in the feedback path around the operational amplifier are chosen to produce critical damping. The approximate system spectral density is

$$S_{\phi_o}(f) = \frac{10^{-11.3}}{f^3} + 10^{-17.7}.$$

Fig. 5 shows the open loop noise of both oscillators and the closed loop system output for two different unity gain frequencies, 8 Hz (20 ms) and 16 Hz (10 ms). If the unity gain frequency is too high the system spectral purity is degraded by the reference noise; the optimum unity gain frequency is near 8 Hz in this example.

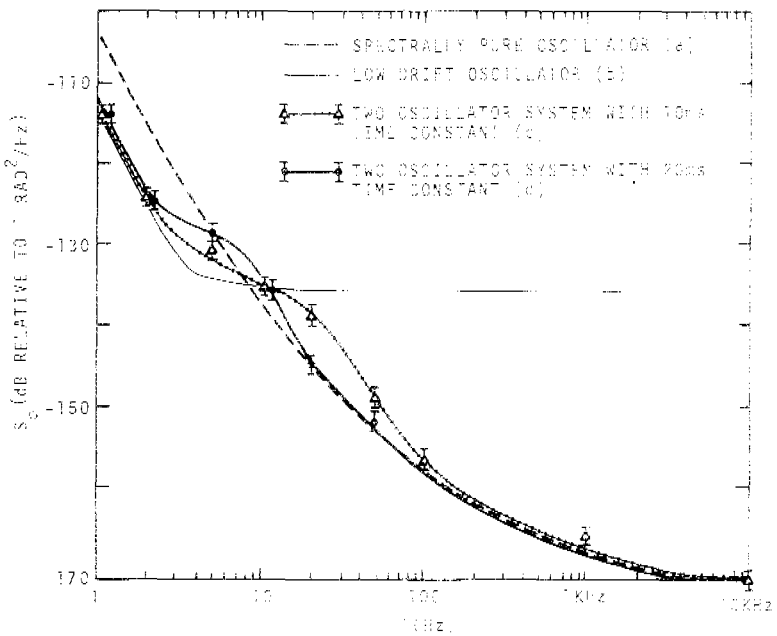

Fig. 5. Spectral density of phase for (a) 5-MHz VCO having excellent spectral purity, (b) 5-MHz VCO having good long term stability, (c) system performance with 16 Hz unity gain frequency, and (d) system performance with 8 Hz unity gain frequency.

The time domain stability is shown in Fig. 6. The triangles are the system stability with 8 Hz unity gain frequency, while the circles are the spectrally pure oscillator open loop stability. The two horizontal lines are the time domain performances calculated from the S_ϕ data of Fig. 5. The line with slope of τ^{+1} corresponds to a drift rate of 3.7 x 10^{-8}/day.

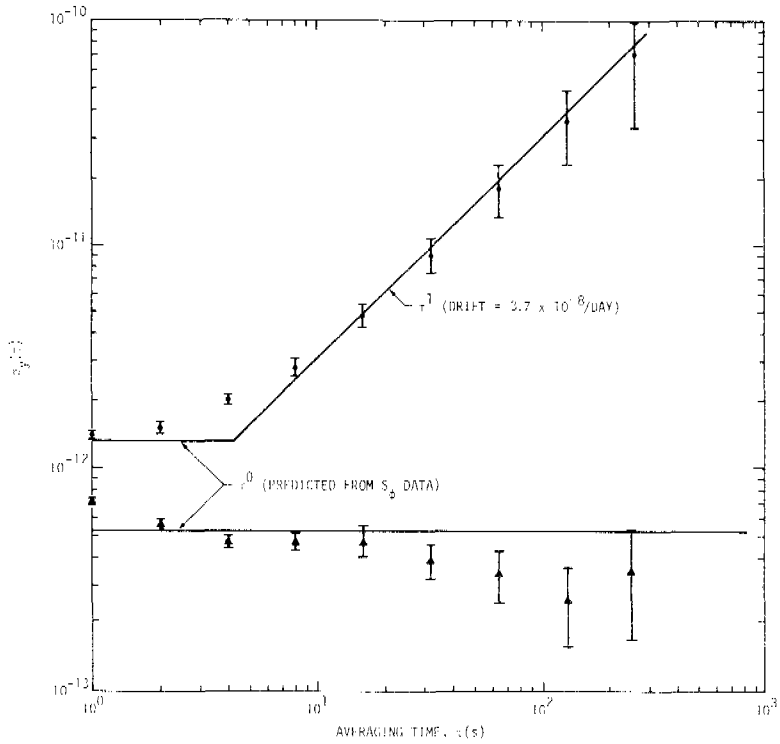

Fig. 6. Time domain stability of the spectrally pure oscillator (circles) and the two-oscillator system with 8 Hz unity gain frequency (triangles).

The results which could be obtained with three other systems are shown in Fig. 7. The stability shown for system 1 results from phase locking three commercial oscillators: A state-of-the-art 5-MHz oscillator provides the short term stability (τ<1s) and is locked to a low drift oscillator for best intermediate stability; the long term performance results from locking this pair to a cesium beam frequency standard. This system has the best performance which can be obtained with commercial devices at 5 MHz.

In the region from approximately .01 s to 1 s, the system stability is better than that of any of the component oscillators. This situation occurs in the case of white phase noise, because the stability of the long term stable oscillator in this region is determined by the very high frequency portion of the spectral density. For this reason, $\sigma_y(\tau)$ curves should be used with great caution when predicting system characteristics.

System 2 is a prototype; a 5-MHz quartz crystal oscillator is frequency locked to a passive quartz crystal. It has the best intermediate term

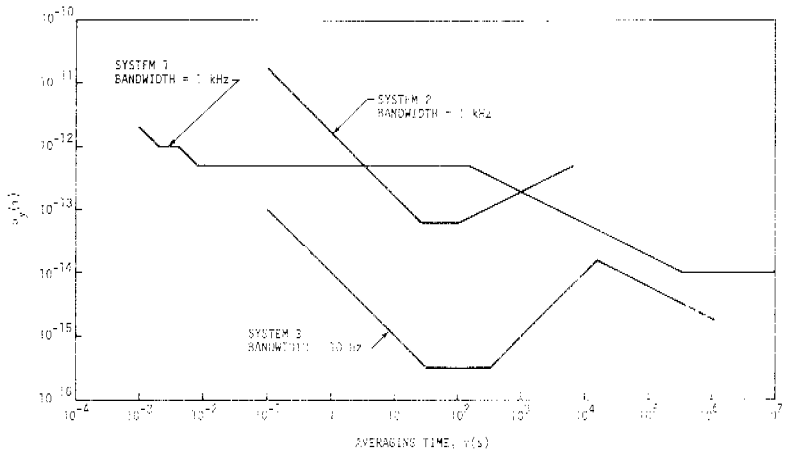

Fig. 7. Time domain stability of (1) a system composed of a spectrally pure quartz oscillator, a low drift quartz oscillator and a cesium clock (predicted); (2) a system composed of a spectrally pure quartz oscillator and a passive quartz crystal (realized); (3) a system composed of a superconducting cavity stabilized oscillator and a passive hydrogen frequency standard (predicted).

stability ever achieved with a quartz crystal, because the passive resonator is operated under conditions which optimize the stability in the 1 to 10^4 s range.[2,3] Eventually system 2 should equal or better the performance of system 1 for all times shorter than 10^4 s.

System 3 shows the results which would be obtained if a superconducting cavity stabilized oscillator were phase locked to a passive hydrogen frequency standard. The system performance is the best which can be achieved with existing devices.[7,8]

SUMMARY

We have illustrated how a systems approach, with its increased degrees of freedom, can provide greatly improved stability performance relative to a single oscillator. In a completely analogous manner an oscillator exhibiting low vibration or radiation sensitivity can be phase locked to a long term stable oscillator to yield improvements in these parameters.

Simple equations which can be used to predict the performance of either frequency or phase lock systems have been discussed. A loop filter for achieving near optimum results was described and experimental results of one phase lock loop system using this filter were presented. Predicted performance curves for some other interesting systems were presented. Using this information, the designer should be able to tailor the performance of an oscillator system to meet the overall frequency stability, accuracy or timing specifications of a navigation, communications or other large electronic system.

APPENDIX A: Phase Noise in Oscillators

The instantaneous output voltage of a high quality signal generator may be written as

$$V(t) = [V_o + \varepsilon(t)] \sin [\Omega_o t + \phi(t)]$$

where V_o and Ω_o are the nominal amplitude and frequency, respectively, while $\varepsilon(t)$ and $\phi(t)$ are random processes representing amplitude noise and phase noise. The objective is to characterize $\phi(t)$. Traditionally the measurements have been described as being performed in either the frequency domain or the time domain. The recommended definition for the frequency stability measure in the Fourier frequency domain is the one sided spectral density on a per Hertz basis, $S_\phi(f)$, of the random process $\phi(t)$.[9] In terms of the spectral density, the mean square phase fluctuations within the frequency band $f_1 < f_2$ is

$$\langle \phi^2(t) \rangle_{f_1, f_2} = \int_{f_1}^{f_2} df \; s_\phi(f)$$

Phase noise in oscillators is often expressed as a ratio of single sideband phase noise, per root Hertz to carrier power--$\mathcal{L}(f)$--as a function of Fourier frequency offset from the carrier. $\mathcal{L}(f)$ is related to the spectral density of phase noise of the oscillator by the equation

$$\mathcal{L}(f) = \frac{1}{2} s_\phi(f) \quad \text{for} \quad \int_f^\infty df \; s_\phi(f) \ll 1$$

Figure 8 shows the typical appearance of the spectral density of phase noise of an oscillator. High quality oscillators often exhibit power law dependence of the spectral density. In region I, S_ϕ is typically proportional to $1/f^3$ and the oscillator is said to have a flicker frequency noise behavior; it is probably the result of changes in the values of the frequency determining elements. In region II, S_ϕ is proportional to $1/f^2$ and the oscillator is said to have white frequency noise; it is often the result of thermal noise in the gain element of the receiver. Normally, the amplitude noise is much less than the phase noise in both region I and II. In region III, S_ϕ is constant and the oscillator is said to have white phase noise. This is usually the result of additive thermal noise in an amplifier or some other device. In this region, the amplitude noise is generally equal in magnitude to the

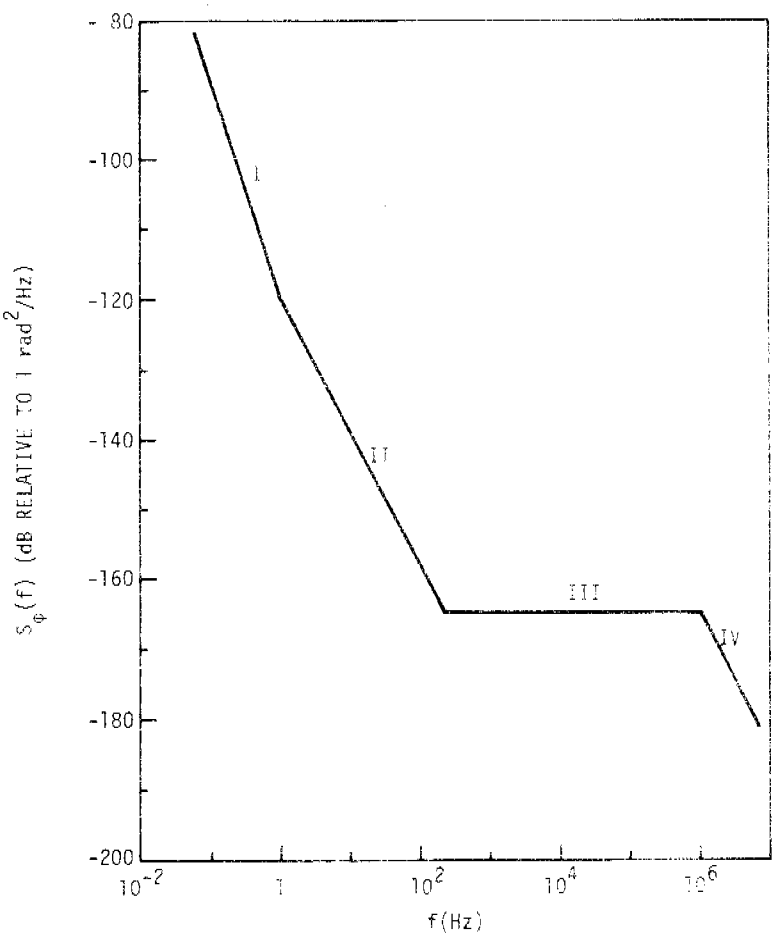

Fig. 8. Typical spectral density of phase for a high quality oscillator.

phase noise. Region IV is usually due to finite bandwidth of the output amplifiers.

APPENDIX B: Frequency Stability of an Oscillator

The instantaneous fractional frequency deviation from nominal is defined as

$$y(t) = \frac{1}{2\pi\nu_0} \frac{d\phi(t)}{dt}$$

The recommended definition for the frequency stability measure in the time domain is the two sample, zero-deadtime variance, commonly called

the Allan variance,

$$\sigma_y^2(\tau) = \left\langle \frac{(\bar{y}_{k+1} - \bar{y}_k)^2}{2} \right\rangle$$

where

$$\bar{y}_k = \frac{1}{\tau} \int_{t_k}^{t_k+\tau} y(x)dx$$

is the average fractional frequency over the kth interval of length τ, and the angular brackets indicate an infinite time average.[9] It is, in general, also necessary to specify the measurement bandwidth, f_h.

Fig. 9 illustrates the typical appearance of the two sample deviation for a high quality oscillator; power law behavior is also common in this

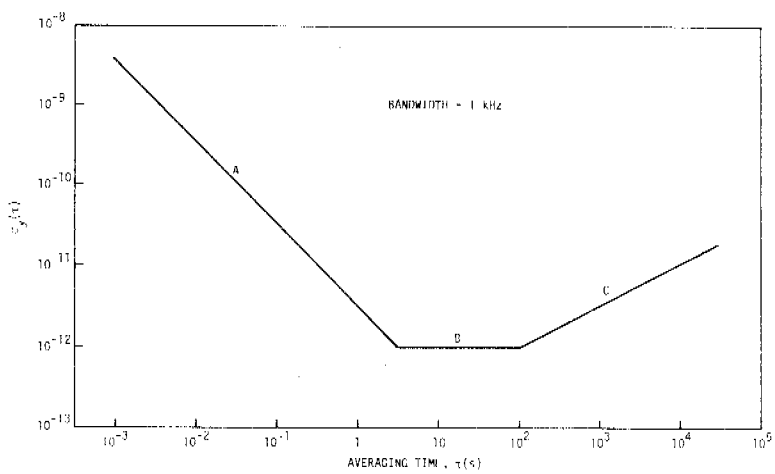

Fig. 9. Typical two sample deviation for a high quality oscillator.

case. In region A, $\sigma_y(\tau)$ is dominated by the high frequency noise of the oscillator and the stability usually improves as τ^{-1} (white phase noise) or $\tau^{-1/2}$ (white frequency noise). The stability is generally dependent on measurement bandwith in region A. In region B, the oscillator noise is dominated by the flicker of frequency behavior and σ_y is constant. For longer times the frequency stability generally degrades as $\tau^{1/2}$ or τ often due to deterministic effects like temperature, power level, and aging of components.

REFERENCES

[1] D. W. Allan and H. Hellwig, in Proc. Position Location & Navigation Symposium, (IEEE, New York, 1978) pp. 29-36.

[2] F. L. Walls and S. R. Stein, IEEE Trans. Instrum. Meas., IM-27, 249-252 (1978).

[3] S. R. Stein, C. M. Manney, Jr., F. L. Walls, James E. Gray, and Raymond J. Besson, in Proc. of the 32nd Annual Symposium on Frequency Control (EIA, Wash., DC, 1978) pp. 527-530.

[4] L. S. Cutler and S. L. Searle, Proc. IEEE 54, 136-154 (1966).

[5] J. L. Melsa and D. G. Schultz, Linear Control Systems (McGraw-Hill, New York, 1969) pp. 383-393.

[6] F. M. Gardner, Phaselock Techniques (John Wiley, New York, 1966) pp. 7-10.

[7] S. R. Stein and J. P. Turneaure, in Future Trends in Superconductive Electronics, Hugh C. Wolfe, ed., No. 44 (AIP Conference Proceedings, New York, 1978) p. 204.

[8] F. L. Walls in Proc. Eighth Annual Precise Time and Time Interval Applications and Planning Meeting (Technical Information & Administrative Support Division, Code 250, Goddard Space Flight Center, Greenbelt, MD 20071) p. 369-380.

[9] James A. Barnes, et al., IEEE Trans. Instrum. Meas. IM-20, 105-120 (1971).

QUESTIONS AND ANSWERS

MR. LAUREN RUEGER, Johns Hopkins University, Applied Physics Lab:

What servo systems have you suggested for use in complex systems and how would you propose to verify that they are functioning correctly? Would you have to go through a three-cornered comparison of three systems to verify they are working?

DR. STEIN:

You bring up a valid point. Of course, if one is talking about environmental problems, such as, say, acceleration sensitivity, one doesn't have a problem because one can compare the oscillator under acceleration to an oscillator in a nice environment, one that doesn't have a problem. When talking about pushing system performance to the limit, one always has the problem you discussed.

MR. RUEGER:

I believe what you are suggesting is an operational use of such a complex system; and if it is a complex one, then you need verification, in service, that these types of equipment are working and continue to work at their full performance.

DR. STEIN:

Perhaps I am not following your point. I think the answer to your question is that one tries, for instance, to produce an oscillator which has far better behavior, say, under irradiation than existing oscillators and still meets a time dispersion specification, long-term, something like a JTIBS-type specification.

And in that case, one doesn't really have a problem because one can compare the oscillator operating in the harsh environment to oscillators operating in good environments that maintain their good performance because they are not subjected to this problem.

MR. RUEGER:

The answer that you are giving me is one of the design verification, but not one in which the operation performance is sustained. And to verify that a device of this kind works in service over long periods of time is not the same as a qualification type of a test.

DR. STEIN:

I guess I will have to leave that to the systems designers.

DR. JACQUES VANIER, Laval University:

It may not be a servo system after all. You said it is a servo system, but you have to make measurements to calibrate everything around it, and that may be very expensive.

DR. STEIN:

Well, once again, the environmental measurements can and would be made by environmental sensors, automatically.

DR. VANIER:

Yes, but they are not in a servo loop. You're proposing an open loop.

DR. STEIN:

Well, it is open loop, and you are perfectly right in the sense that you are not attempting to control the environment. You are only attempting to optimize oscillator performance.

DR. GIOVANI BUSCA, Ebauches

I would like to ask if the good performance you have obtained depends on the fact that when you use your system, you correct for the phasing stability of the electronics. Is it essential to correct for the phasing stability of the electronics to have the best results?

DR. STEIN:

The answer to your question is really not trivial. The passive electronics may be an important part. We feel it is necessary. However, we have also used some novel crystals with new design, SC-cut, and this also is probably necessary.

Our results, for instance, with standard cut AT crystals, are approximately 3×10^{-13}, and I would guess that the reason for that has to do with temperature instabilities in the oven. So without the right crystal, you also cannot do it.